# Digital Signal Processing

## Digital audio processing tutorial 3

## Convolution Reverb method

By Yonghao Wang
Centre of Digital Media Technology

# 1 Learning Outcomes

- Understand Linear systems and impulse responses
- Understand convolution method and using convolution to emulate the system output.
- Be able to use convolution method to create echoic sound.

# 2 Impulse response and convolution

The linear system theory tells us the system properties can be fully characterised by its impulse response. Therefore, to find out the system outputs of any inputs signal, we can simple use convolution method to calculate the output signal by convoluting the input signal by the system impulse response.

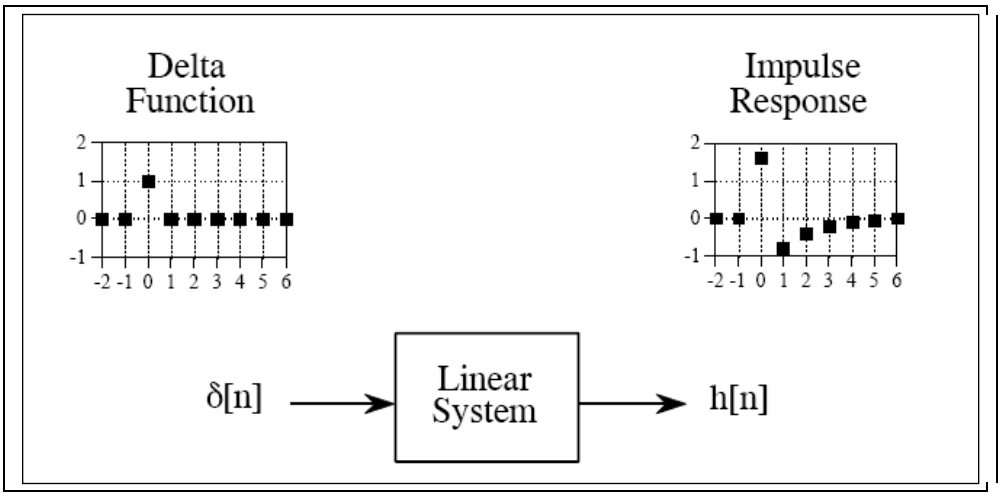


*Figure 1 impulse response of linear system*

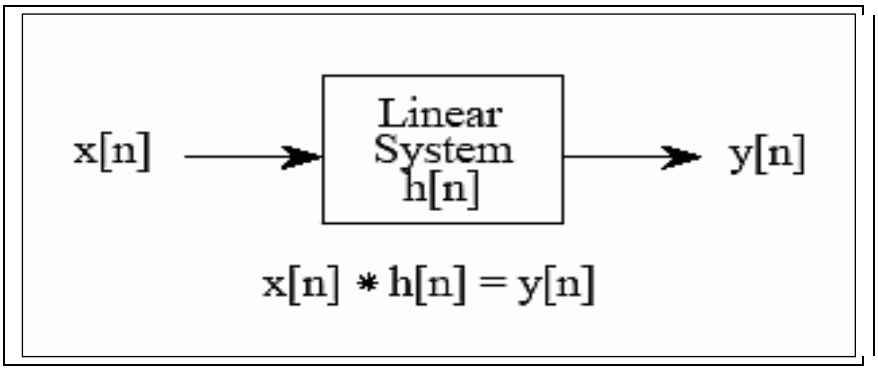


*Figure 2 calculate output signal by convolution*

# 3 Digital Echo Effects

In the real world, the original sound and the reflected sound from the surrounding environment could be perceived by human ear as an echo. The reflected sound which contributes to echo effect is normally attenuated and delayed. The natural environment is very complicated, there are multiple echoes and echo paths. The group of reflected sounds can be reflected again and again. The surfaces of different objectives are different which not only cause time delay and strength attenuation but also alter the frequency properties. That will result in reverberation.

To simplify problem and establish mathematical model, we can use simple impulse response model to simulate a very simple echo. The simple impulse response of echo system can be viewed as the following equation. In here, $\delta(n)$ is unit impulse function, the a is attenuation factor, and $t_s$ is delay of echo:

$$h(n) = \delta(n) + a\delta(n - t_s)$$

To generate any echo version of a sound, you can simply convolve input signal (original sound) with $h(n)$. The result shall be the echoic sound.

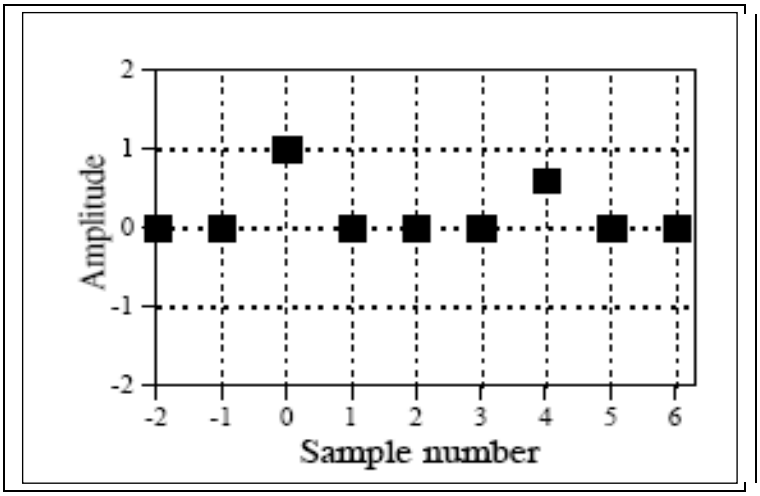


*Figure 3 Simple digital Echo impulse response*

**Example Code:**

```
ir = zeros(1, 50000);
ir([1, 1000, 5000, 10000, 15000]) = [1, 0.8, 0.7,
0.6, 0.5];% create an impulse response

[sig, fs] = audioread('pluck.wav'); %Read Signal
%sound(sig,fs);

y = conv(sig, ir); % convolve the two signals
%sound(y,fs);
subplot(211), plot(sig);
subplot(212), plot(y);
% plot both signals on same figure.
```

Table 1 convolution examples

## Tasks

1) Create an Echo effect from convolution by generating a signal that looks like the figure:

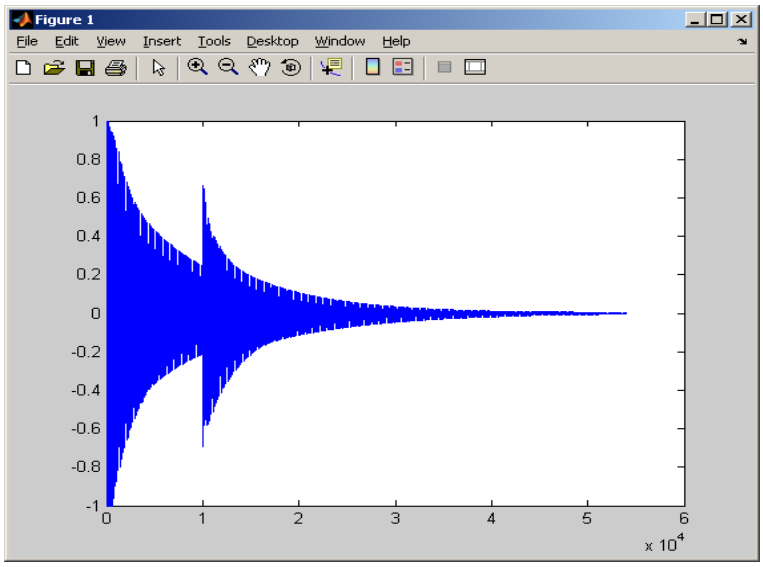


*Figure 4 Echoed wav*

Using the sample audio "pluck.wav" (you can download from moodle), Write Matlab code to:

a. Create echo system impulse response by using Matlab "zeros()" function.

b. Create echo version of "pluck.wav" by using convolution method.

c. Make comments of your selection of delay and attenuation factor. And modify the above code with proper time axis in second and delay parameter in ms.

2) Create a reverberation effect using impulse response

Using the impulse response audio files "LargeHall.wav" and "Church.wav", create a reverberation of your pluck or other audio signals.

Tips: you need to obtain the mono channel from the recording.

3) Create an algorithm to mix the reverbed version of sound and original sound together with different percentage of "dry" and "wet". You can use the multi-track recording provided in the website.

4) Write your own 1-dimensional convolution algorthim, use it to apply to reverberation effect. What do you notice about the processing time from your algorithm compared to the built-in MATLAB Version.?